NEW CITY NISSAN
HAWAII HIGH SCHOOL ATHLETIC ASSOCIATION
39th ANNUAL GIRLS VOLLEYBALL STATE CHAMPIONSHIPS
OCTOBER 31-NOVEMBER 3, 2007 (WED.-SAT.)

HILO CIVIC AUDITORIUM – DIVISION I
McKINLEY & RADFORD HIGH SCHOOLS – DIVISION II

NEW CITY NISSAN / HHSAA
39th ANNUAL VOLLEYBALL STATE CHAMPIONSHIPS
WEDNESDAY, OCTOBER 31 – SATURDAY, NOVEMBER 3, 2007

HAWAII HIGH SCHOOL ATHLETIC ASSOCIATION

Executive Director ..... Keith Amemiya
Director of Information ..... Natalie Webb
Office Manager ..... Carole Nagaji
Administrative Assistant ..... Coreen Muraoka
Girls Volleyball Coordinator ..... Beth McLachlin
Officials Coordinator ..... Wayne Lee

TOURNAMENT COMMITTEE

Host Schools ..... Keaau High School (Division I)
..... Hawaii Baptist Academy (Division II)
Tournament Directors ..... Iris McGuire (Division I)
..... Deren Oshiro & Keith Sugiura (Division II)
Site Directors ..... Iris McGuire, Hilo Civic Auditorium
..... Neal Takamori, McKinley High School
..... Kelly Sur, Radford High School
BIIF Executive Director ..... Ken Yamase
ILH Executive Director ..... Don Botelho
Pairings and Rules Committee ..... Beth McLachlin, Neal Takamori, Wayne Lee & Keith Amemiya
Athletic Trainers ..... BIIF & ILH
Awards Ceremonies ..... New City Nissan
Publicity ..... Natalie Webb
Statistics & Results ..... Natalie Webb, Coreen Muraoka & Lili Ann Sora
Public Address Announcers ..... Dominic Yagong, Ben Kiaaina & Wayne Ohashi

SPECIAL THANKS

New City Nissan ..... Frank Kudo
..... John Uekawa
..... Ryan Takata

NEW CITY NISSAN / HHSAA
39th ANNUAL VOLLEYBALL STATE CHAMPIONSHIPS
WEDNESDAY, OCTOBER 31 – SATURDAY, NOVEMBER 3, 2007

TOURNAMENT INFORMATION

I. TOURNAMENT REPRESENTATION

	GIRLS	
	DIVISION I	DIVISION II
OIA	5*	3
ILH	3	3
BIIF	1*	3
MIL	2	2
KIF	0	1
TOTAL	12	12

* Playoff between OIA and BIIF for final Division I berth.

II. TOURNAMENT SCHEDULE

GIRLS DIVISION I

DAY 1: WEDNESDAY, OCTOBER 31			
MATCH	**TIME**	**SITE**	**MATCH**
Match 1	3:00 PM	Hilo Civic Auditorium	First Round Matches
Match 2	4:30 PM		
Match 3	6:00 PM		
Match 4	7:30 PM		
DAY 2: THURSDAY, NOVEMBER 1			
Match 5	1:30 PM	Hilo Civic Auditorium	Consolation Match
Match 6	3:00 PM		Quarterfinal Matches
Match 7	4:30 PM		
Match 8	6:00 PM		
Match 9	7:30 PM		
DAY 3: FRIDAY, NOVEMBER 2			
Match 10	1:30 PM	Hilo Civic Auditorium	Consolation Match
Match 11	3:00 PM		
Match 12	4:30 PM		
Match 13	6:00 PM		Semifinal Match
Match 14	7:30 PM		
DAY 4: SATURDAY, NOVEMBER 3			
Match 15	3:00 PM	Hilo Civic Auditorium	Consolation: Winners of #5 & #6
Match 16	4:30 PM		5th Place: Winners of #11 & 12
Match 17	6:00 PM		3rd Place: Losers of #13 & #14
Match 18	7:30 PM		Championship: Winners of #13 & #14

GIRLS DIVISION II

DAY 1: WEDNESDAY, OCTOBER 31			
MATCH	**TIME**	**SITE**	**MATCH NOTE**
Match 1	6:00 PM	McKinley HS	First Round Matches
Match 2	7:30 PM		
Match 3	6:00 PM	Radford HS	
Match 4	7:30 PM		
DAY 2: THURSDAY, NOVEMBER 1			
Match 5	4:30 PM	McKinley HS	Consolation Matches
Match 6	4:30 PM	Radford HS	
Match 7	6:00 PM	McKinley HS	Quarterfinal Matches
Match 8	7:30 PM		
Match 9	6:00 PM	Radford HS	
Match 10	7:30 PM		
DAY 3: FRIDAY, NOVEMBER 2			
Match 11	6:00 PM	McKinley HS	Consolation Matches
Match 12	6:00 PM	Radford HS	
Match 13	7:30 PM	McKinley HS	Semifinal Matches
Match 14	7:30 PM	Radford HS	
DAY 4: SATURDAY, NOVEMBER 3			
Match 15	3:00 PM	McKinley HS	Consolation: Winners of #5 & #6
Match 16	4:30 PM		5th Place: Winners of #11 & 12
Match 17	6:00 PM		3rd Place: Losers of #13 & #14
Match 18	7:30 PM		Championship: Winners of #13 & #14

III. Rosters and Team Pictures

A. Rosters

Schools with teams that have secured or are in contention for a tournament berth are required to submit team rosters via e-mail to the HHSAA Director of Information, Natalie Webb (webb@hhsaa.org). Official roster forms can be downloaded at www.sportshigh.com.

DEADLINE: WEDNESDAY, OCTOBER 24, NOON

B. Team Pictures

Team pictures submitted on disk or via e-mail (faith@tradepublishing.com) are required to be **300 dpi or greater**. Otherwise, a hard copy of the team picture is required and must be mailed or hand delivered to the below address. Please also provide a photo caption identifying individuals (left to right and by row).

Faith Freitas (Ph: 848-0711)
Trade Publishing Co.
287 Mokauea Street
Honolulu, HI 96819

DEADLINE: WEDNESDAY, OCTOBER 24, NOON

III. Coaches' Meeting

DIVISION I: Head coaches of all participating teams or their designees are **required to attend** the coaches' meeting on Wednesday, October 31, 2007, 10:00 am, at the Hilo Civic Auditorium.

DIVISION II: Head coaches of all participating teams or their designees are **required to attend** the coaches' meeting on Wednesday, October 31, 2007, 10:00 am, at McKinley High School's Hirata Hall (auditorium next to the Pensacola parking lot).

IV. Code-of-Conduct

A. The coach shall have direct responsibility for the conduct of team members prior to, during, and after tournament competition (in the hotel, in public, at the tournament, transportation to and from sites).

B. The HHSAA Executive Director may establish a common curfew hour as needed.

C. The drinking of alcoholic beverages, smoking, drug use, loud, unruly or destructive behavior will not be tolerated.

D. Coaches are requested to inform their athletes of hotel rules and regulations. Please emphasize the importance of appropriate conduct and behavior and consideration for other guests at the hotel. Schools and students will be charged for damages incurred by them at the hotel.

E. It is recommended that schools inform parents regarding Code-of-Conduct in writing.

HAWAII HIGH SCHOOL ATHLETIC ASSOCIATION

DIVISION I Girls Volleyball State Championships

October 31-November 3, 2007 · Hilo Civic Auditorium

Presented by the Hawaii High School Athletic Association

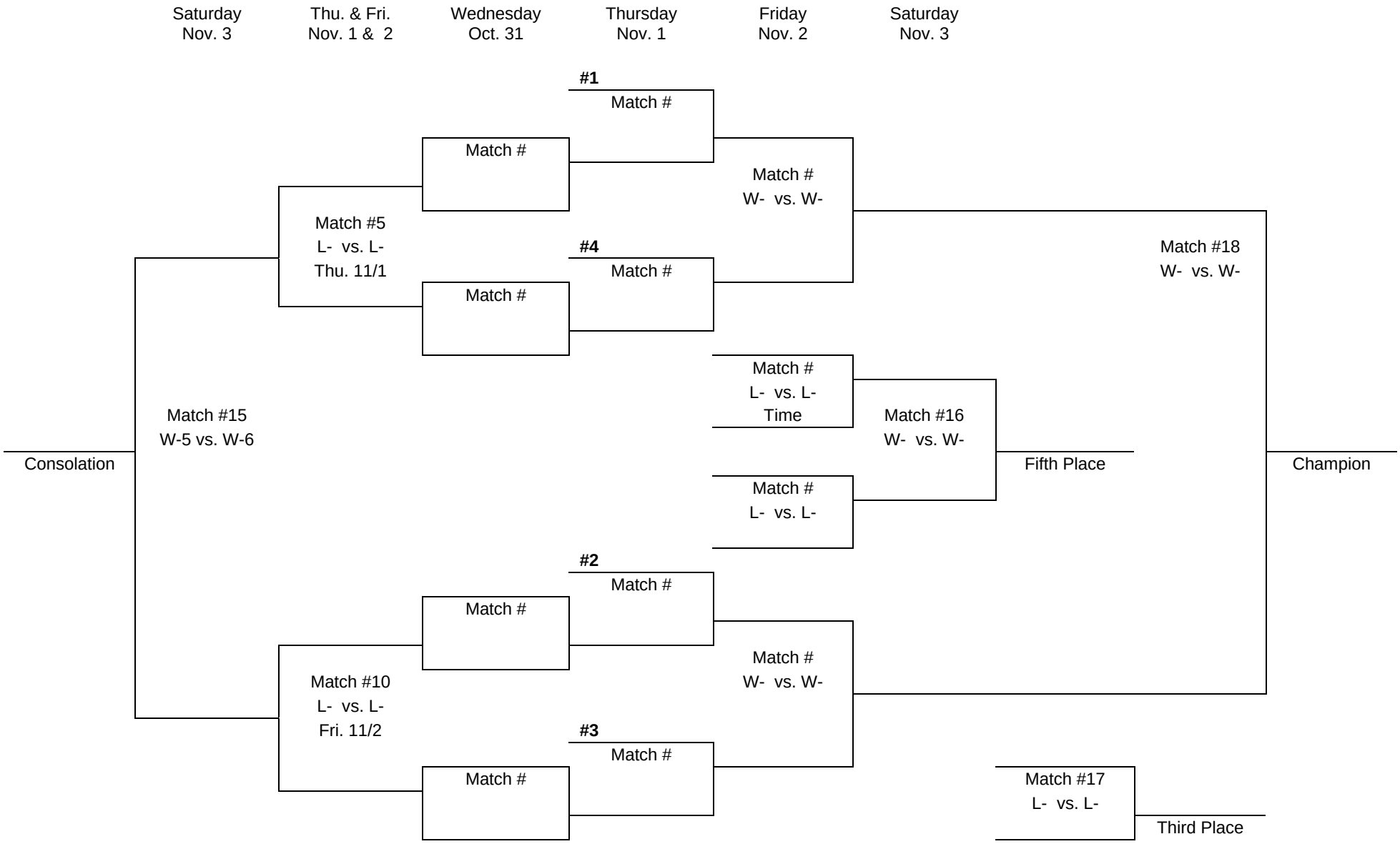

DIVISION II Girls Volleyball State Championships

October 31-November 3, 2007 · McKinley & Radford High Schools

Presented by the Hawaii High School Athletic Association

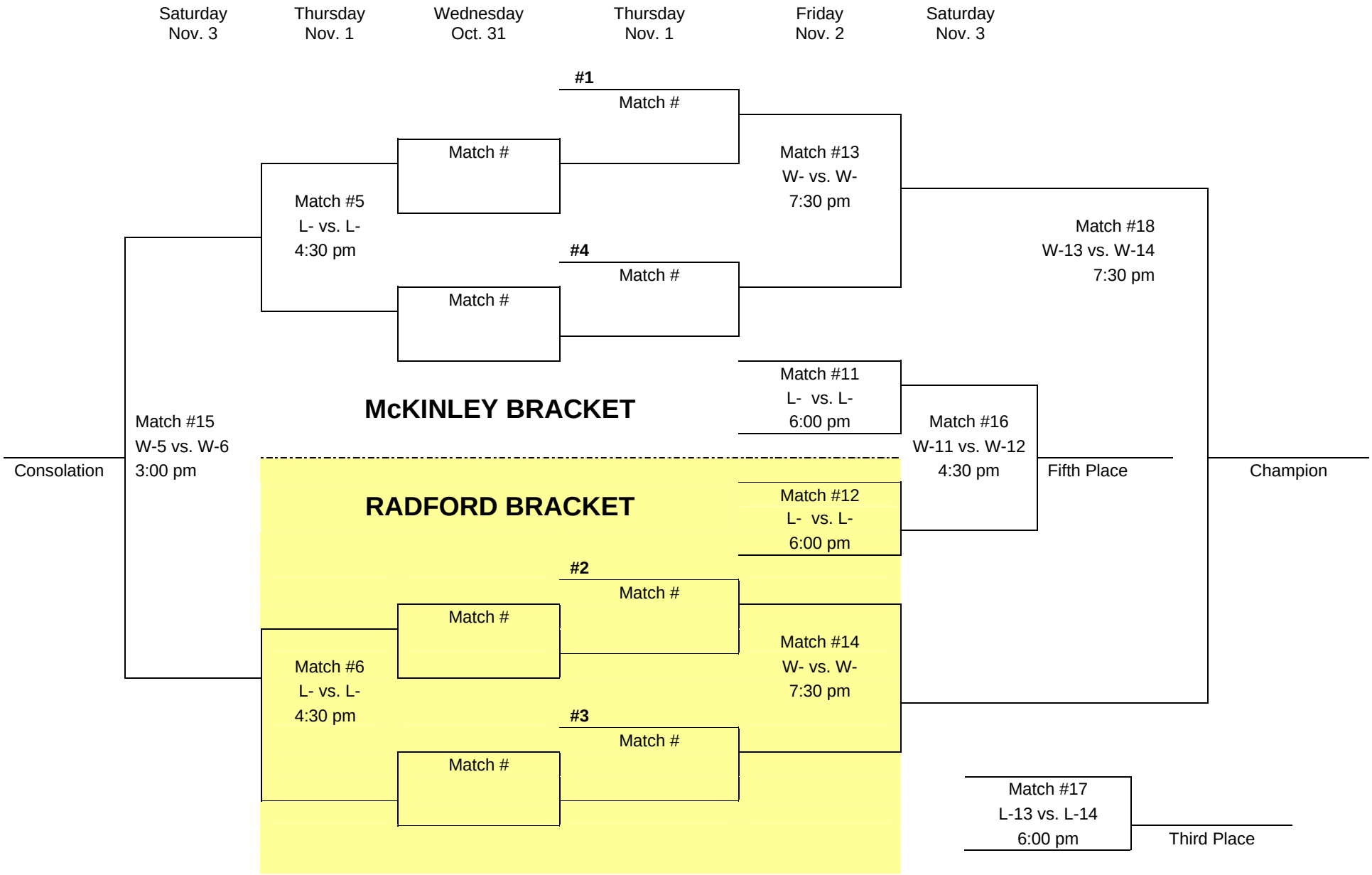

VOLLEYBALL TOURNAMENT

I. Specific Objectives

A. To select state volleyball champions for boys and girls through tournament competition.

B. To recognize the combined efforts of all the participating teams in the tournament.

C. To encourage the highest principles and standards of general behavior.

D. To emphasize respect for opponents relative to organized cheering activities.

E. To promote the highest principles of citizenship in tournament games.

II. Officials

A. Qualifications

1. Attend pre-tournament officials' clinic.

2. Evidence of having passed the National Federation Volleyball Rules Examination.

3. Officials are required to have officiated in league matches during the current season in order to qualify for the state tournament.

B. Selection and Assignment

1. The Sport Coordinator and the league Executive Secretaries shall select the tournament officials with the approval of the HHSAA Executive Director.

2. The Sport Coordinator and the participating leagues' officials' advisor shall prepare the scheduling of officials for all tournament games. For the championship games, four linesmen, one umpire, one referee, one scorer and one assistant scorekeeper shall be assigned. Games preceding the championship games shall have two linesmen.

C. Financial Allowance

1. All officials shall be compensated in accordance with HHSAA rates.

2. HHSAA rates: Referee ($32); Umpire ($28); Line Judge ($15); Scorekeeper ($18); Asst. Scorekeeper/Libero Tracker ($13).

D. Uniform

1. The official's uniform will consist of – white shirt, black slacks (no black jeans or Dockers), black socks, and clean, black shoes. There will be no exceptions to the uniform requirements. No patches or uniforms that identify an official with an association are permitted.

2. All state tournament officials/umpires shall wear uniforms in accordance with their sport's NFHS rules/guidelines/recommendations. In the absence of any NFHS rules/guidelines/recommendations, the sport's HHSAA Sport Coordinator shall have the final say as to the appropriateness of a state tournament official's/umpire's uniform.

III. Eligibility

A. Each participant must be eligible under the rules of his/her league and also under the requirements as specified by HHSAA.

IV. Rules Governing Tournament

A. National Federation volleyball rules shall govern the tournament, with HHSAA modifications as needed.

1. All matches shall be best two out of three games.
2. Rally scoring to 25 points for all games, must win by two points in each game. No point cap in any game.
3. Let serve to be allowed.
4. Incorporate the libero position, pursuant to NFHS and HHSAA approved guidelines.

B. Interpretations and Appeals

1. Decisions concerning facts—Decisions by officials concerning facts are final and not subject to protest.
2. Rule interpretation disagreement—If a playing captain or head coach disagrees with the interpretation of a rule, he/she may call this to the attention of the referee, but must do so immediately.
3. Inform referee and committee of appeals—When a coach plans to appeal the interpretation of a rule, he/she shall immediately inform the referee and through some representative present the protest and facts to the proper committee. The referees will make an immediate decision or let the Officials' Coordinator make the decision and it will be final.

C. For safety reasons, all HHSAA volleyball games will be played on center court. The tournament will be held on separate weeks with one gender on Week #19 and the other on Week #20. The gender with the least number of total teams will play on Week #19. However, this rule shall not apply when both tournaments are held during the same week.

V. Tournament Representation

A. $$\frac{\text{Number of Participating Teams in League}}{\text{Number of Participating Teams in State}} \times \text{Number of Teams in State Tournament}$$

B. Pac-Five teams are eligible to participate in the following HHSAA state tournaments: football, boys soccer, girls soccer, canoe paddling, girls water polo, and baseball. Also, the MIL's Pac-Three football team is eligible to participate in the HHSAA state football tournament.

C. For team-only state tournaments, a combination team shall be counted in the league representation formula as long as one of the schools in the combination team has a minimum number of players, as follows:

Volleyball – 6, Football – 11, Softball – 9, Soccer – 11, Basketball – 5, Baseball – 9, Canoe Paddling – 6, Water Polo – 7

D. For team-only state tournaments, if a combination team qualifies for a state tournament, only players from one of the schools with the above listed minimum number shall be allowed to participate in the state tournament.

VI. Tournament Format

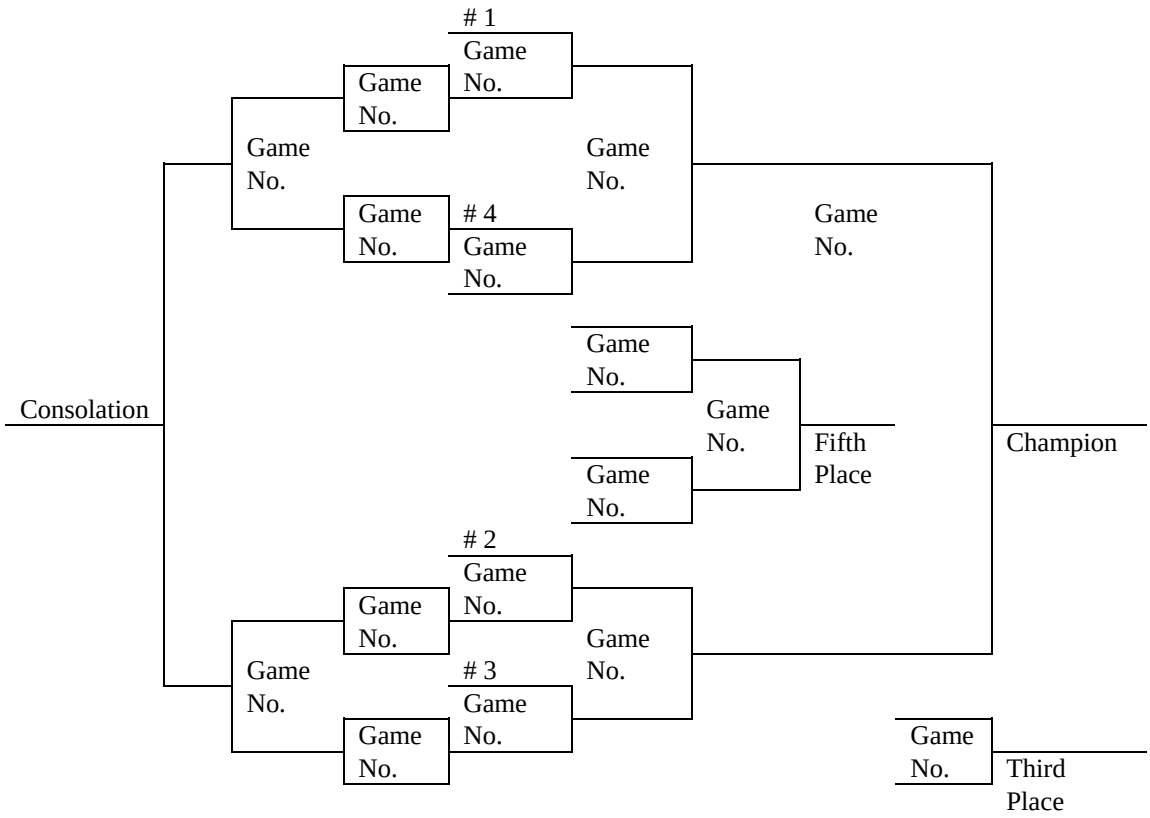

VII. Size of Team in Tournament

Schools may bring an unlimited number of players accompanied by authorized coaches. Names of coaches and players must be listed on the official tournament roster form.

VIII. Pairing

A. Seeding/Pairings shall be done by the Tournament Seeding/Pairing Committee and provided to the radio, TV and news media at the earliest time possible.

Seeding/Pairing Committee

1. HHSAA Executive Director, Chairperson
2. Sport Coordinator
3. Others as selected by the HHSAA Executive Director

B. Byes shall be granted for four champions from the five leagues according to their demonstrated strength (and seeded one to four accordingly).

C. The #2 and #3 teams from the same league shall be placed in the opposite bracket from the league's seeded champion.

D. If there is a 4th and 5th representative from the same league, then the 4th and 5th representative shall be placed in the same bracket as the seeded league champion.

E. Pairings shall be made so teams from the same league will not meet in the first round. Exception to the above shall be when the OIA is the unseeded champion and has five representatives.

F. The unseeded league champion (#5 in ranking) will be placed in either "A" or "B". When the unseeded champion is placed in a bracket, the unseeded champion will be paired with a #3, #4 or #5 from the MIL, BIIF, OIA, or ILH.

G. Caution on placing teams: the #1 or #2 seed should have the lowest ranked team in their bracket. Seeding committee should follow guidelines A-F.

H. The Tournament Seeding/Pairing Committee shall have the authority to modify any of the above guidelines if necessary.

IX. Tournament Balls

The official tournament ball shall be the Spalding Top-Flite TL 4000 Gold volleyball.

X. Uniforms

A. Identical school designated uniform.

B. Shoes must be worn as part of the uniform.

C. National Federation uniform rules to prevail.

XI. Awards and Trophies

A. Permanent trophies for boys and girls championship teams.

B. Second place trophies for runner-up boys and girls teams.

C. 15 medals for the championship team members.

D. 15 medals for runner-up team members.

E. Schools may order extra medals for team members at their own expense.

XII. Evaluation

An evaluation report and results of the tournament are to be submitted to the HHSAA Executive Director within two weeks after the tournament.

XIII. Admission

Adults	$7.00
Senior Citizens (ages 62 and over)	$5.00
Students (Grades K-12)	$5.00

NEW CITY NISSAN VOLLEYBALL STATE CHAMPIONSHIPS
SOUVENIR T-SHIRT ORDER FORM

_____ School requests to order the following sizes of the 2007 New City Nissan Volleyball State Championships Souvenir T-shirts at $15.00 per shirt and Souvenir Tournament Programs at $7.00 per program.

Size	Quantity	Price/T-shirt	Total
Small	_____	$15.00	_____
Medium	_____	$15.00	_____
Large	_____	$15.00	_____
X-Large	_____	$15.00	_____
XX-Large	_____	$15.00	_____
Tournament Program	_____	$7.00	_____
		GRAND TOTAL	_____

Please make check payable to: Hawaii High School Athletic Association

Send pre-orders to your respective host schools by Tuesday, October 30, 2007. Checks payable to HHSAA may be sent with pre-orders or brought to the coaches' meeting/tournament.

Contact person:_____
Daytime phone: _____
Check one:
☐ Check placed in mail
☐ Will drop off at coaches meeting

DIVISION I	DIVISION II
Iris McGuire, Athletic Director Keaau High School 16-725 Keaau-Pahoa Road Keaau, HI 96749 Phone: (808) 982-4220 · Fax: (808) 982-4224	Deren Oshiro, Athletic Director Hawaii Baptist Academy 2429 Pali Highway Honolulu, HI 96817 Phone: (808) 564-0327 · Fax: (808) 595-0296

Note: Preorders must be paid in full by first day of the tournament or shirts will be released to the general public.

HHSAA VOLLEYBALL TOURNAMENT CHAMPIONS - GIRLS

Year	School	League	Coach
1969	Kamehameha	ILH	Kuuipo Lum
1970	Kamehameha	ILH	Kuuipo Lum
1971	Radford	OIA	Donna Mae Chun
1972	Hilo	BIIF	Luella Aina
1973	Punahou	ILH	Mary Perry
1974	Hilo	BIIF	Luella Aina
1975	Waipahu	OIA	Rudy Sambrano
1976	Waipahu	OIA	Rudy Sambrano
1977	Kamehameha	ILH	Kuuipo Lum
1978	Roosevelt	OIA	Robin Goo
1979	Roosevelt	OIA	Robin Goo
1980	University	ILH	Raplee Fitzsimmons
1981	Kailua	OIA	Daniel Kealoha
1982	Kamehameha	ILH	Kuuipo Lum
1983	Kamehameha	ILH	Kuuipo Lum
1984	University	ILH	Raplee Fitzsimmons
1985	University	ILH	Raplee Fitzsimmons
1986	University	ILH	Raplee Fitzsimmons
1987	University	ILH	Raplee Fitzsimmons
1988	University	ILH	Glennie Adams
1989	University	ILH	Glennie Adams
1990	University	ILH	Glennie Adams
1991	Kamehameha	ILH	Dan Kitashima
1992	Kamehameha	ILH	Dan Kitashima
1993	Punahou	ILH	Peter Balding
1994	Kamehameha	ILH	Dan Kitashima
1995	Kamehamha	ILH	Dan Kitashima
1996	Punahou	ILH	Diana McKibbin
1997	Kamehameha	ILH	Dan Kitashima
1998	Kamehameha	ILH	Dan Kitashima
1999	Kamehameha	ILH	Dan Kitashima
2000	Punahou	ILH	Diana McKibbin
2001	Iolani	ILH	Ann Kang
2002	Kahuku	OIA	Mona Ah Hoy
2003	Punahou	ILH	Scott Rigg
2004	Punahou	ILH	Scott Rigg

DIVISION I

Year	School	League	Coach
2005	KS-Kapalama	ILH	Chris Blake
2006	KS-Kapalama	ILH	Chris Blake

DIVISION II

Year	School	League	Coach
2005	Saint Francis	ILH	Eric Perry
2006	Sacred Hearts	ILH	Jonathon Tom